The Pink Panther Service Manual

Innovative Concepts in Entertainment

10123 Main Street

Clarence, NY 14031

WWW.ICEGAME.COM

(716) 759-0360 Service Department

Table of Contents

Safety Statement	3
Cabinet Setup	4
Bonus Setup	5
Monitor Replacement/Cleaning	6-10
Computer Access	11
Joystick Repair	
Control Panel Access	12
Warranty	13

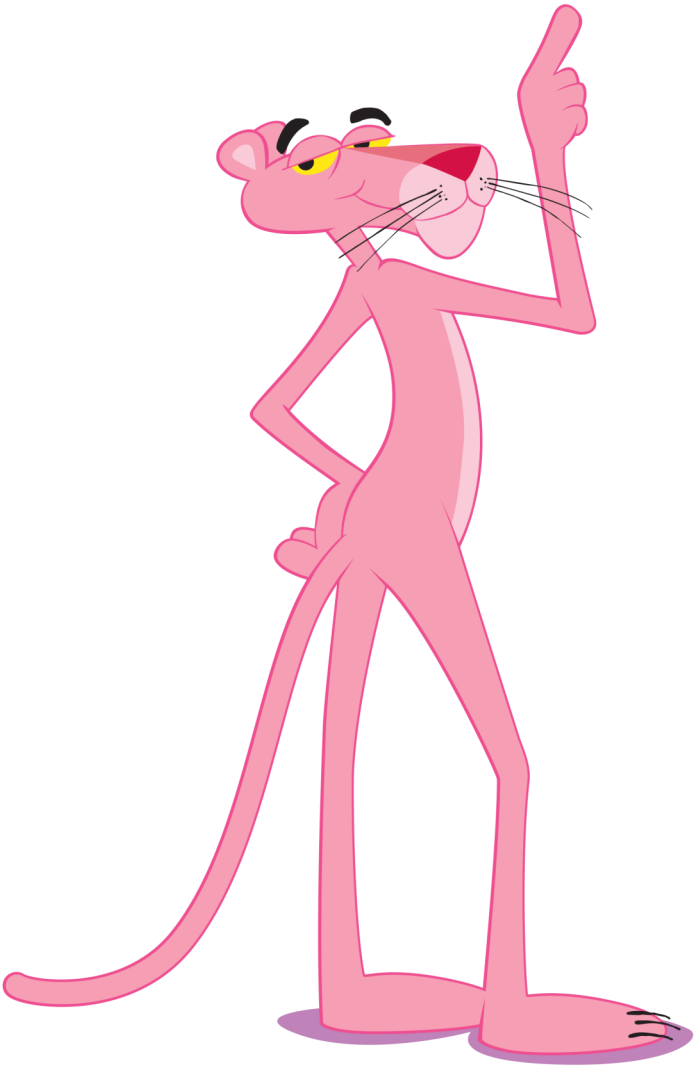

SAFETY AND WARNINGS BEFORE YOU BEGIN

WARNING: WHEN INSTALLING THIS GAME, A GROUNDED A.C. RECEPTACLE MUST BE USED. FAILURE TO DO SO COULD RESULT IN INJURY TO YOURSELF OR OTHERS. FAILURE TO USE A GROUNDED RECEPTACLE COULD ALSO CAUSE IMPROPER GAME OPERATION, OR DAMAGE TO THE ELECTRONICS.

NOTE: THIS GAME IS INTENDED FOR INDOOR USE ONLY.

DO NOT DEFEAT OR REMOVE THE GROUNDING PRONG ON THE POWER CORD FOR THE SAME REASON AS GIVEN ABOVE. USING AN IMPROPERLY GROUNDED GAME COULD VOID YOUR WARRANTY.

HAVE A QUALIFIED ELECTRICIAN CHECK YOUR A.C. RECEPTACLE TO BE SURE THE GROUND IS FUNCTIONING PROPERLY.

THIS GAME IS DESIGNED TO DISSIPATE STATIC ELECTRICITY THROUGH THE GROUNDING PLANE OF THE GAME. IF THE A.C. GROUND DOES NOT WORK, THE GAME COULD DISCHARGE STATIC ELECTRICITY THROUGH THE GAME CIRCUITRY, WHICH COULD CAUSE DAMAGE.

THE POWER SUPPLY IS NOT VOLTAGE ADJUSTABLE. TO OPERATE THE GAME AT VOLTAGES OTHER THAN THOSE IT WAS DESIGNED FOR. PLEASE CONTACT OUR SERVICE DEPARTMENT FOR VOLTAGE CONVERSION INFORMATION.

WARNING

DO NOT remove any of the components on the main board (e.g. compact flash and eproms) while the game is powered on. This may cause permanent damage to the parts and the main board. Removing any main board component part while powered on will void the warranty.

ALWAYS REMOVE POWER TO THE GAME, BEFORE ATTEMPTING ANY SERVICE,

UNLESS NEEDED FOR SPECIFIC TESTING. FAILURE TO OBSERVE THIS PRECAUTION

COULD RESULT IN SERIOUS INJURY TO YOURSELF OR OTHERS.

THIS GAME IS NOT SUITABLE FOR INSTALLATION IN AN AREA WHERE A WATER JET COULD BE USED.

This appliance is not intended for use by persons (including children) with reduced physical, sensory or mental capabilities, or lack of experience and knowledge, unless they have been given supervision or instruction concerning use of the appliance by a person responsible for their safety. Children should be supervised to ensure that they do not play with the appliance.

AC Power Information

The games main fuse is accessed through the back of the game at the power mod. Above the power cord is a small panel that contains the main fuse.

The value of the fuse for 120 volt users is 7 AMPS at 250Volt type slow blow.

The value of the fuse for 230 volt users is 3.5 AMPS at 250Volt type slow blow.

Cabinet Setup

Position the top marquee over the cabinet. Be sure to push the wire harness into the cabinet. Attach the top marquee using two 6369 long bolts and washers. Then open the back door and connect the wire harness.

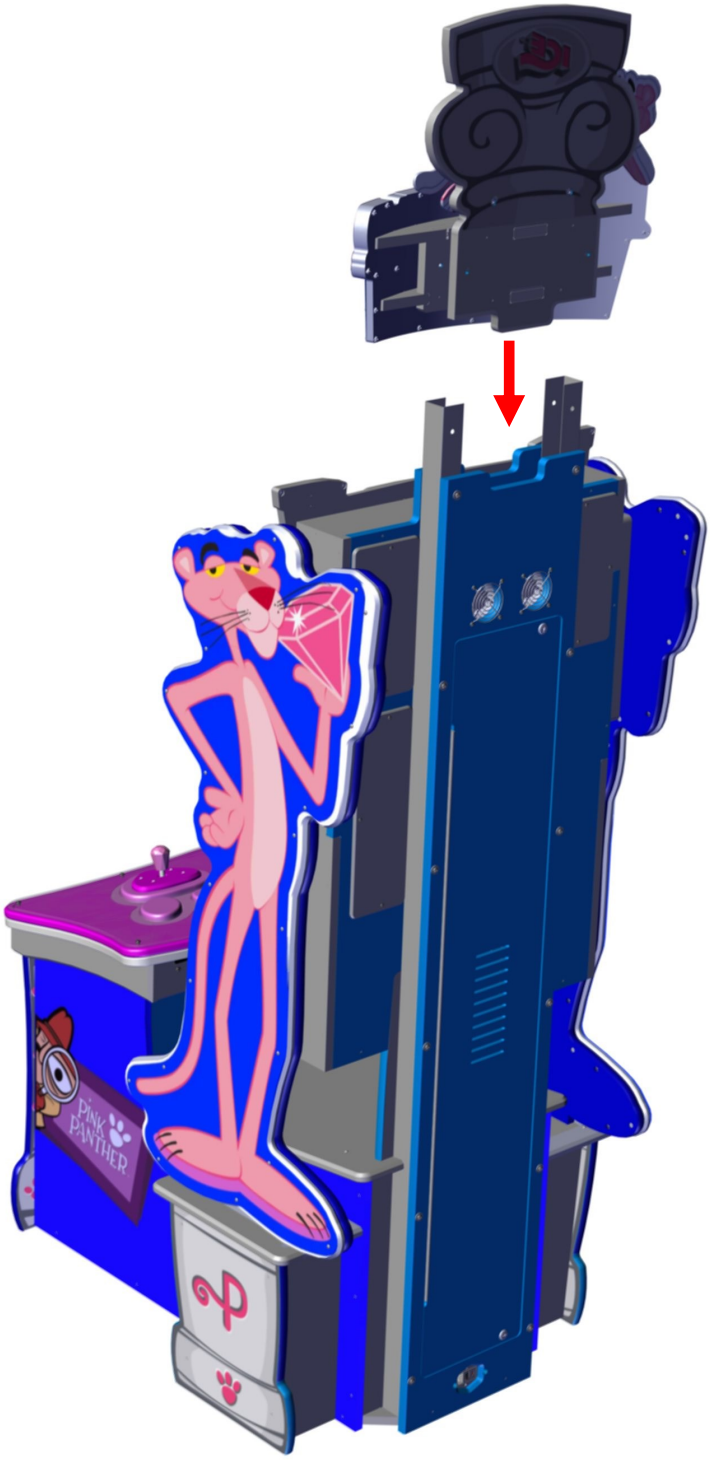

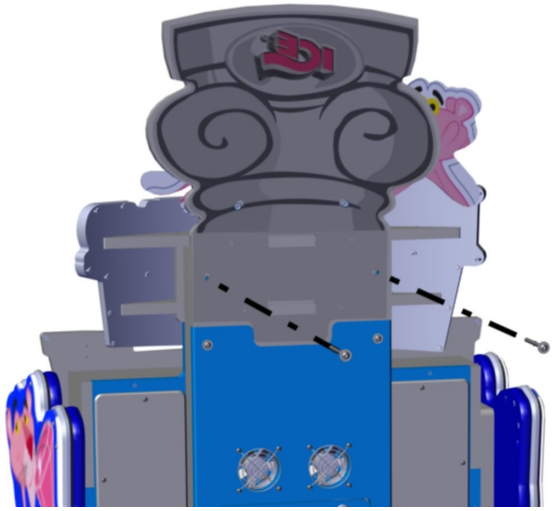

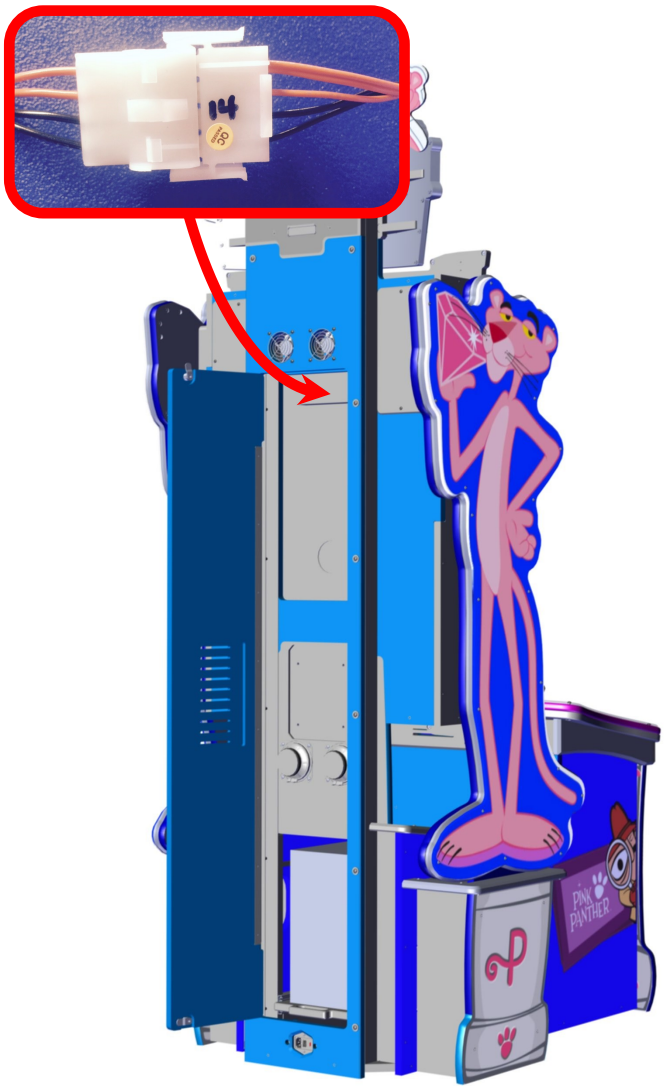

Programming Options

Pressing the "DIAG" button will put the game in program mode. Pressing "Down" and "UP" will cycle through the menu. Pressing "TEST" will go back and pressing "DIAG" will enter or confirm settings.

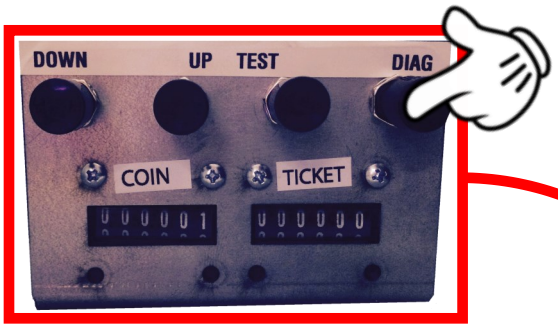

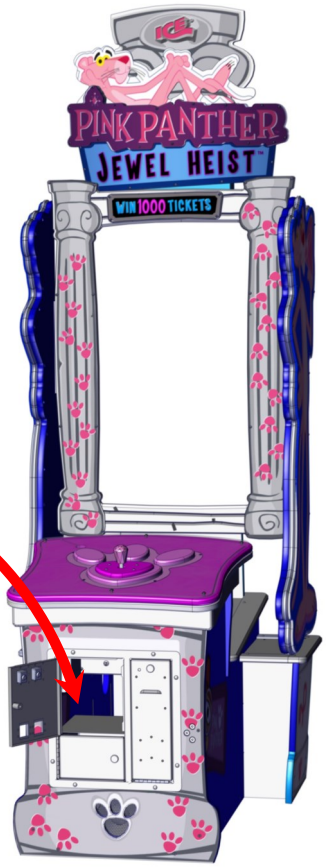

Changing the Bonus Sign

Included in your spare parts is an additional bonus sign is you wish to give 500 tickets instead of 1000 tickets. To change the bonus sign, remove the four bolts shown and switch the bonus sign with new sign. Reinstall using the bolts you removed. Be sure to setup the jackpot bonus to match which sign you display.

Monitor Replacement or Cleaning the glass

Remove Marquee sign (see page 4).

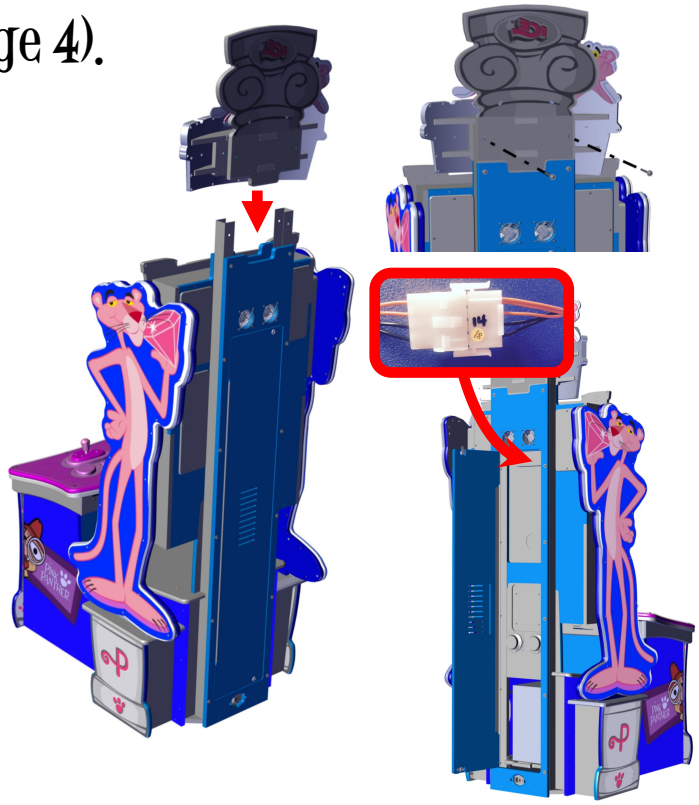

Remove the eighteen 6641 bolts to remove the Pink Panther Graphic panel.

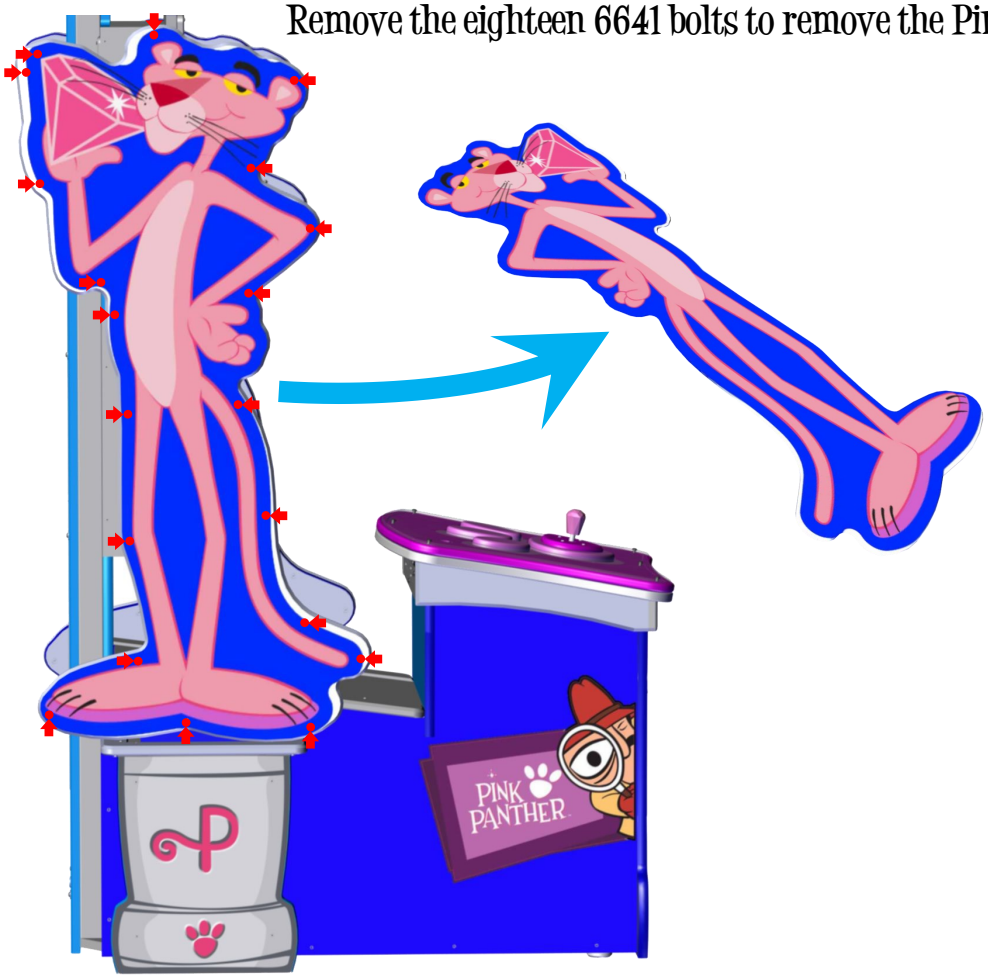

Remove both panels circled and unplug the power harnesses for the pillars.

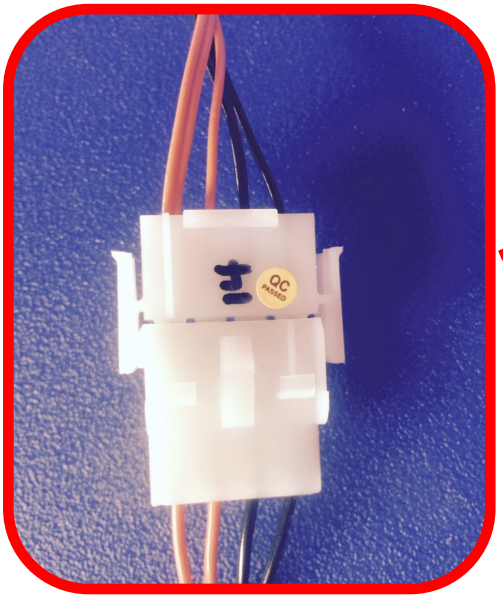

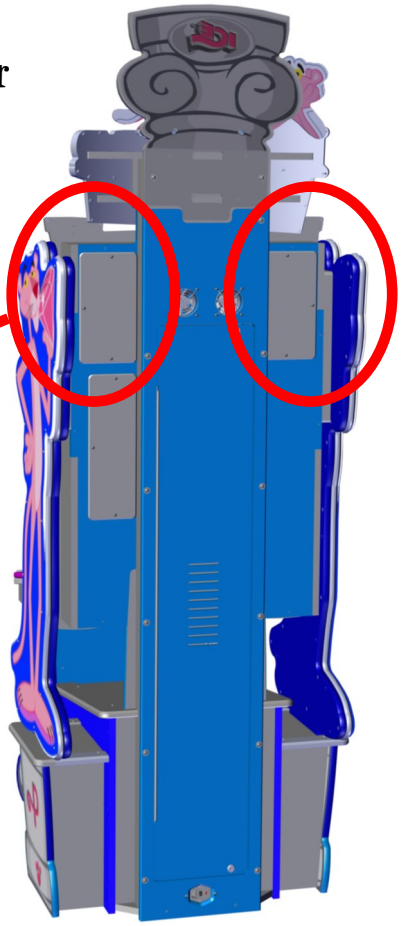

Remove the four 6227 bolts and washers. Repeat for the other side.

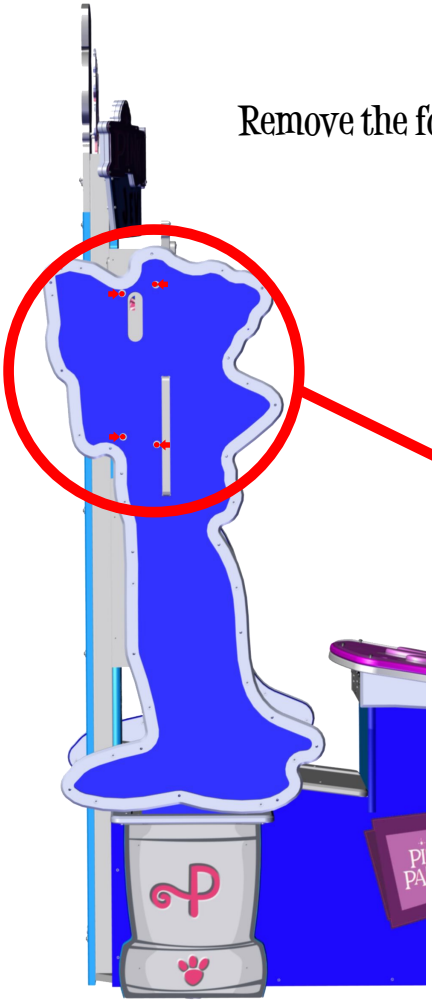

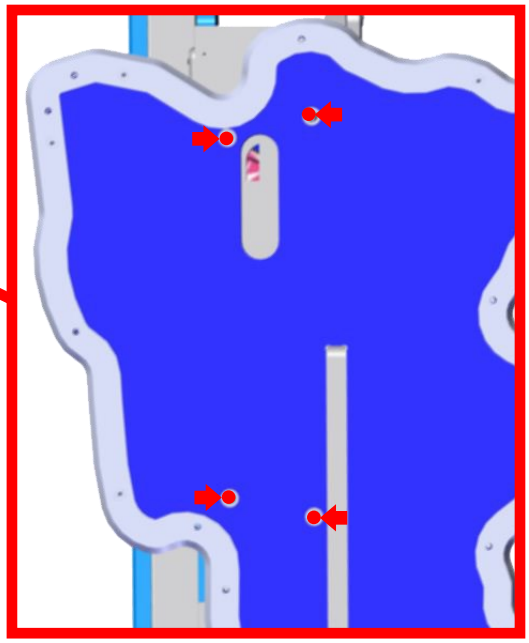

Remove the 6238 screws that hold the monitor access panel to the cabinet.

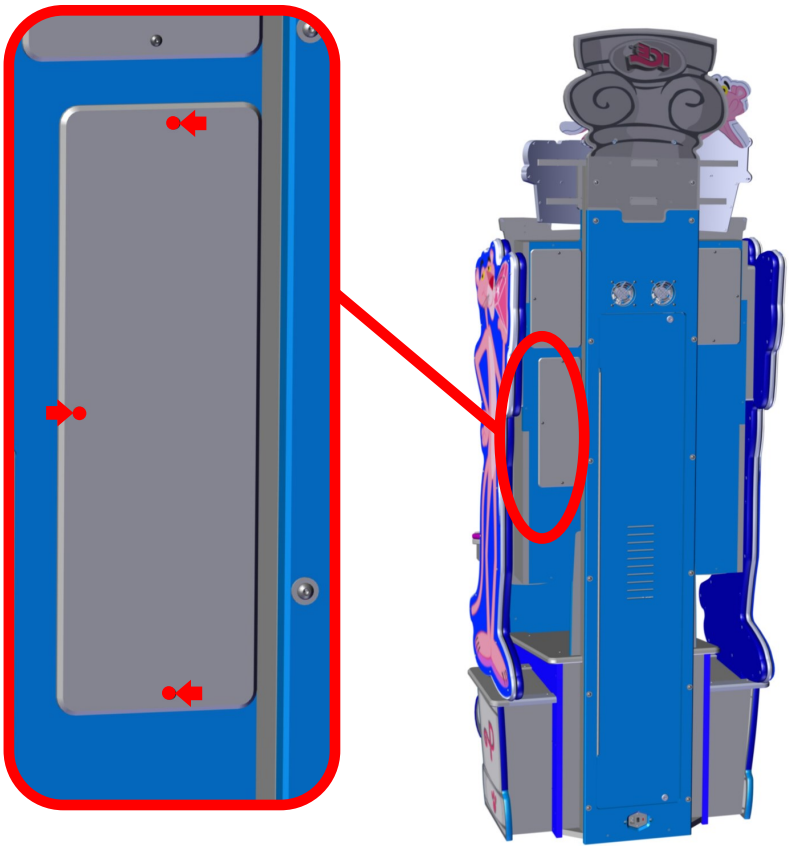

Disconnect both the AC plug and DVI monitor connections. Then remove the six 6369 bolt and washer that hold the monitor assembly.

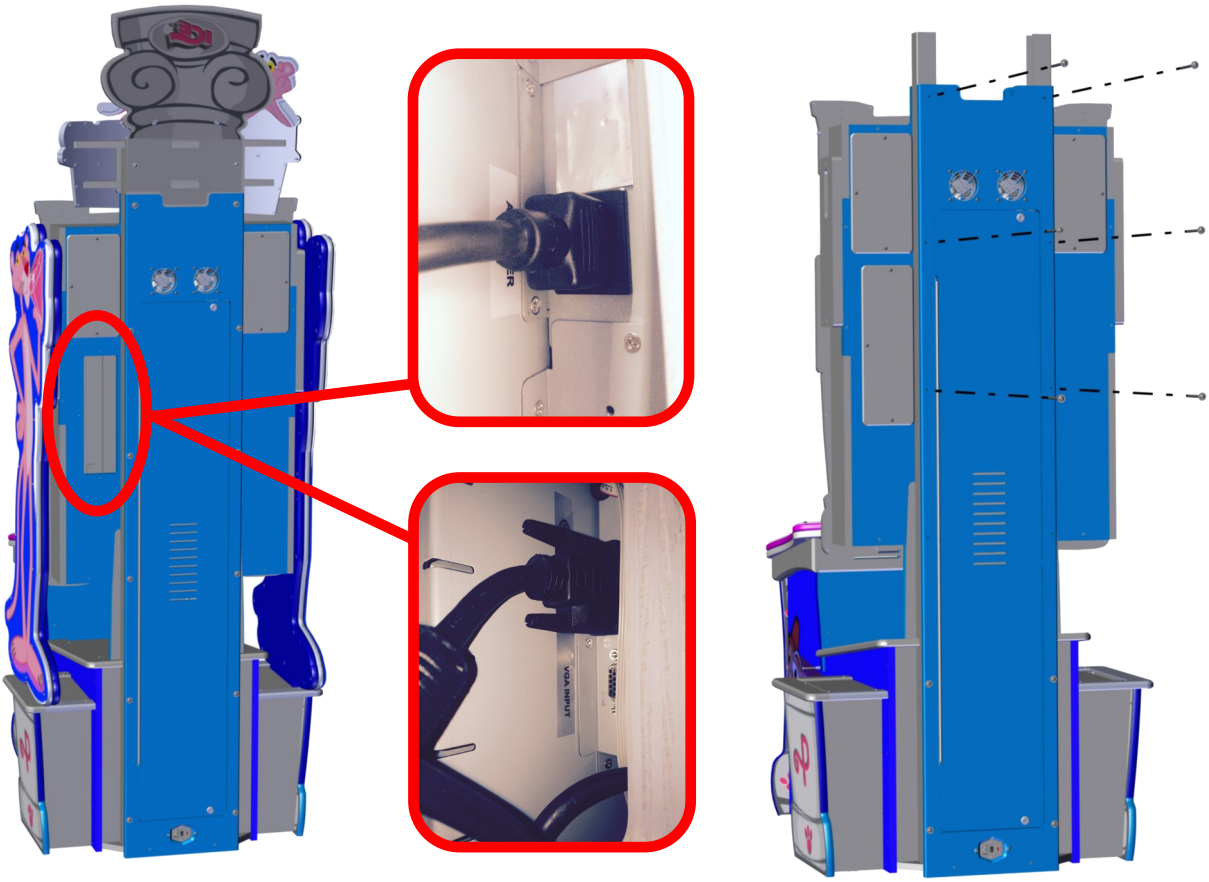

Lift the monitor assembly out and lay it on its back.

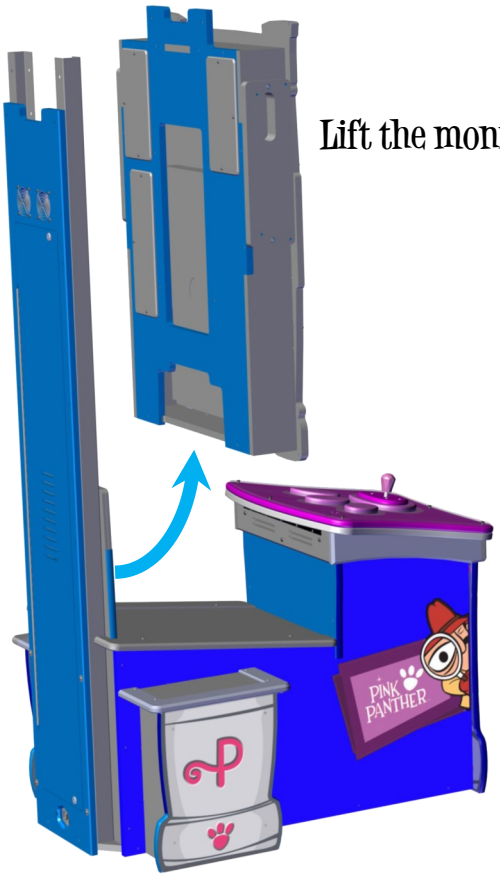

Remove both pillars by removing the eight screws that hold the pillar to the monitor assembly.

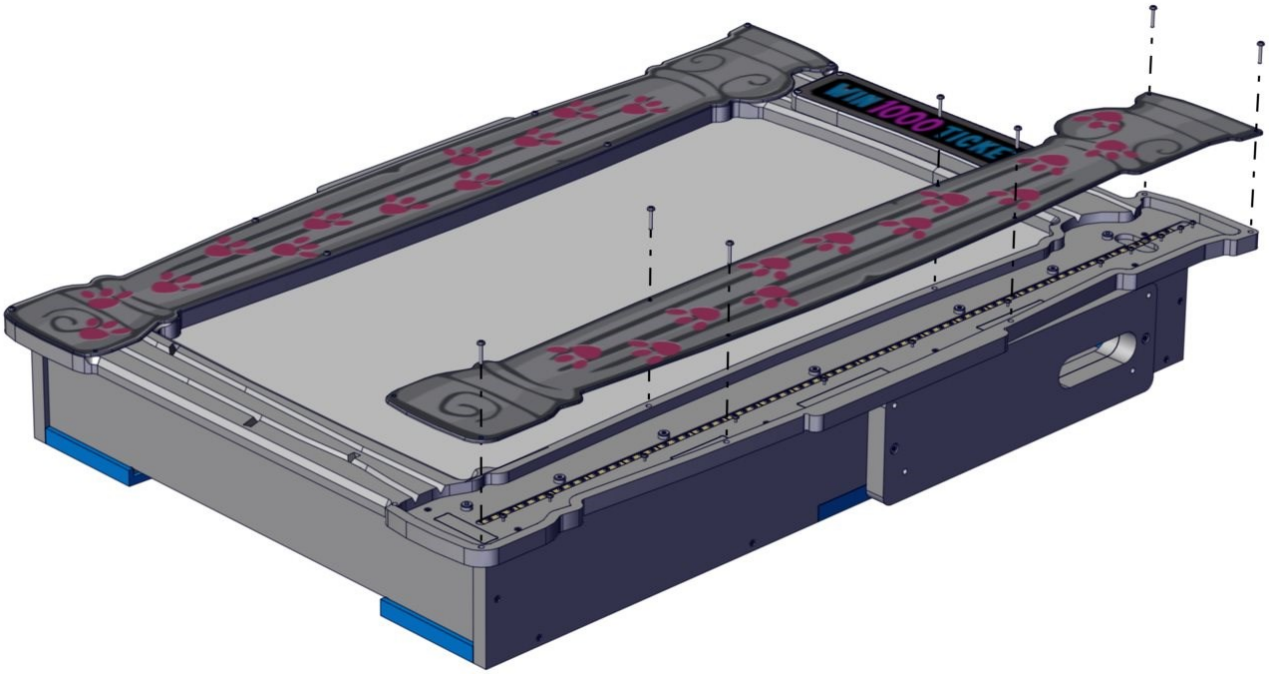

Remove the wood screws to remove front panel.

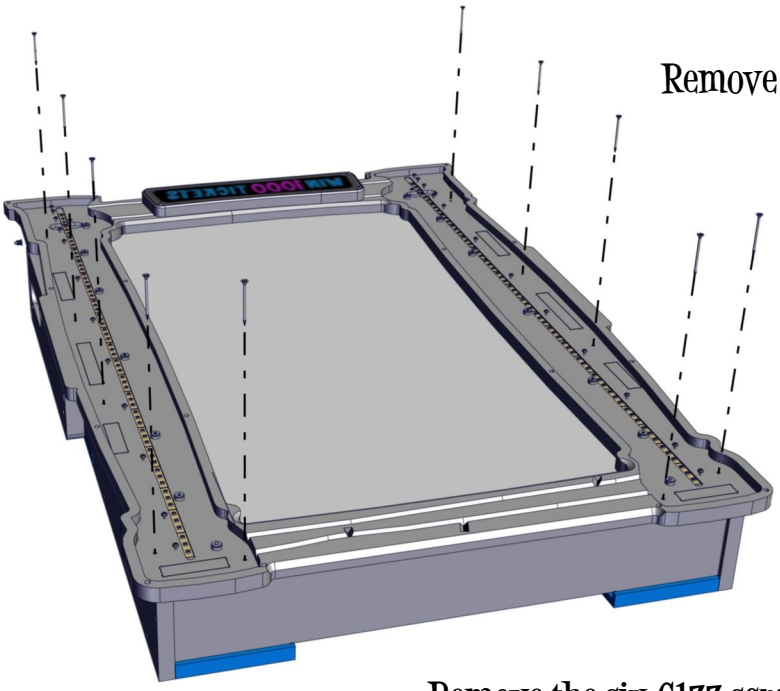

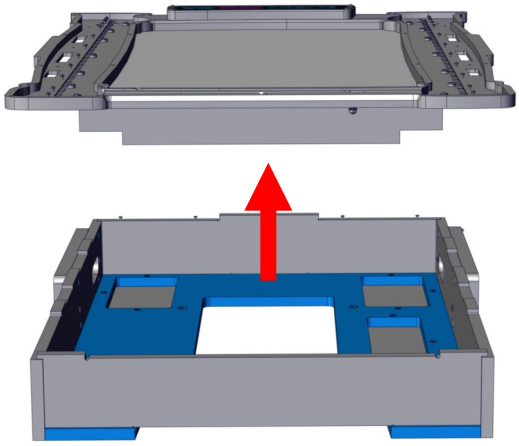

Remove the six 6177 screws and washers to remove the monitor.

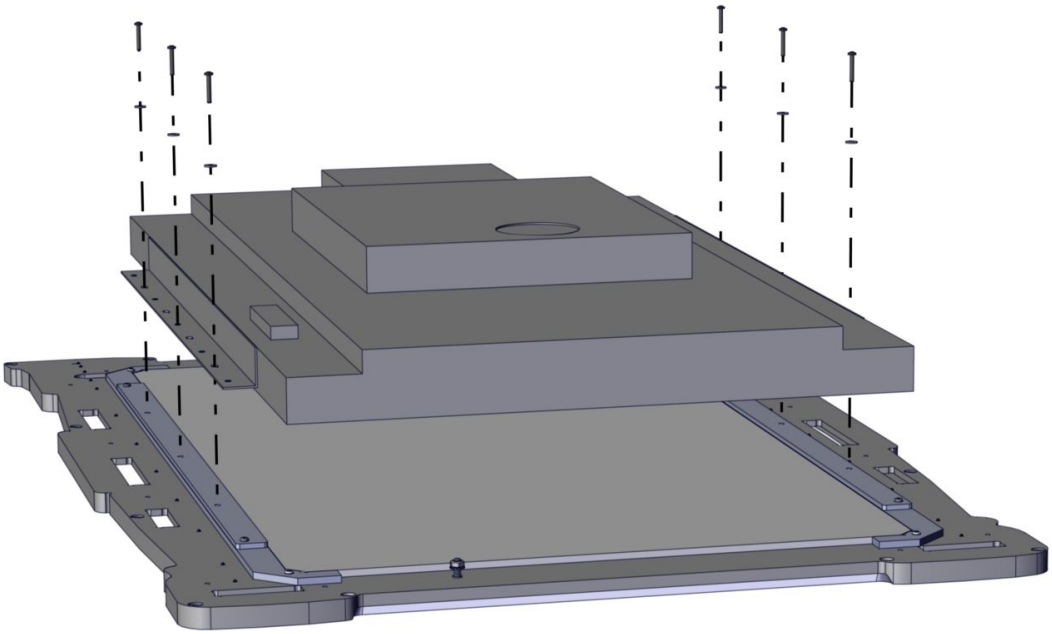

Remove the mounting brackets only if replacing the glass or changing monitor model or manufacture.

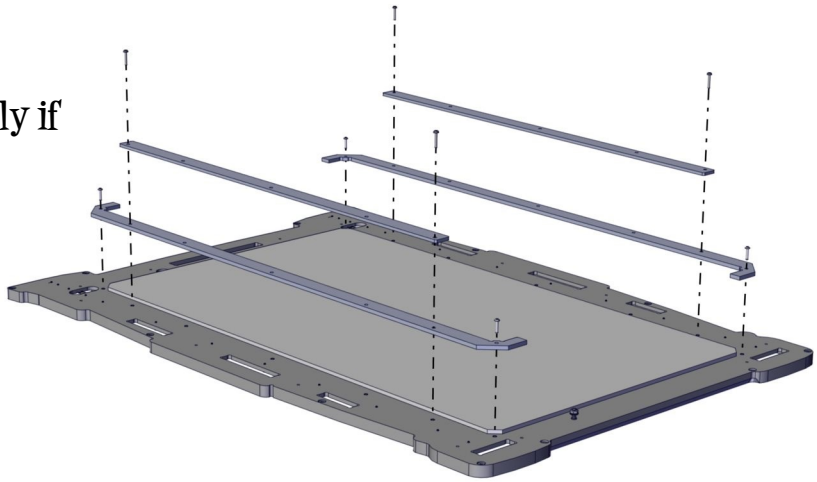

Computer Access:

The computer is accessed through the back of the cabinet. Open the back cabinet door and slide the drawer out.

Hewlett Packard Elite Desk 705 Specs:

- Radeon HD Graphics card
- Connections:
- AC power
- USB I/O
- 3.5 mm Audio cable.
- USB Security Dongle.
- DVI video out.

Joystick Repair:

To access the joystick buttons, open the control panel and carefully push on the clips to replace the restrictor plate assembly. The buttons are attached to this plate.

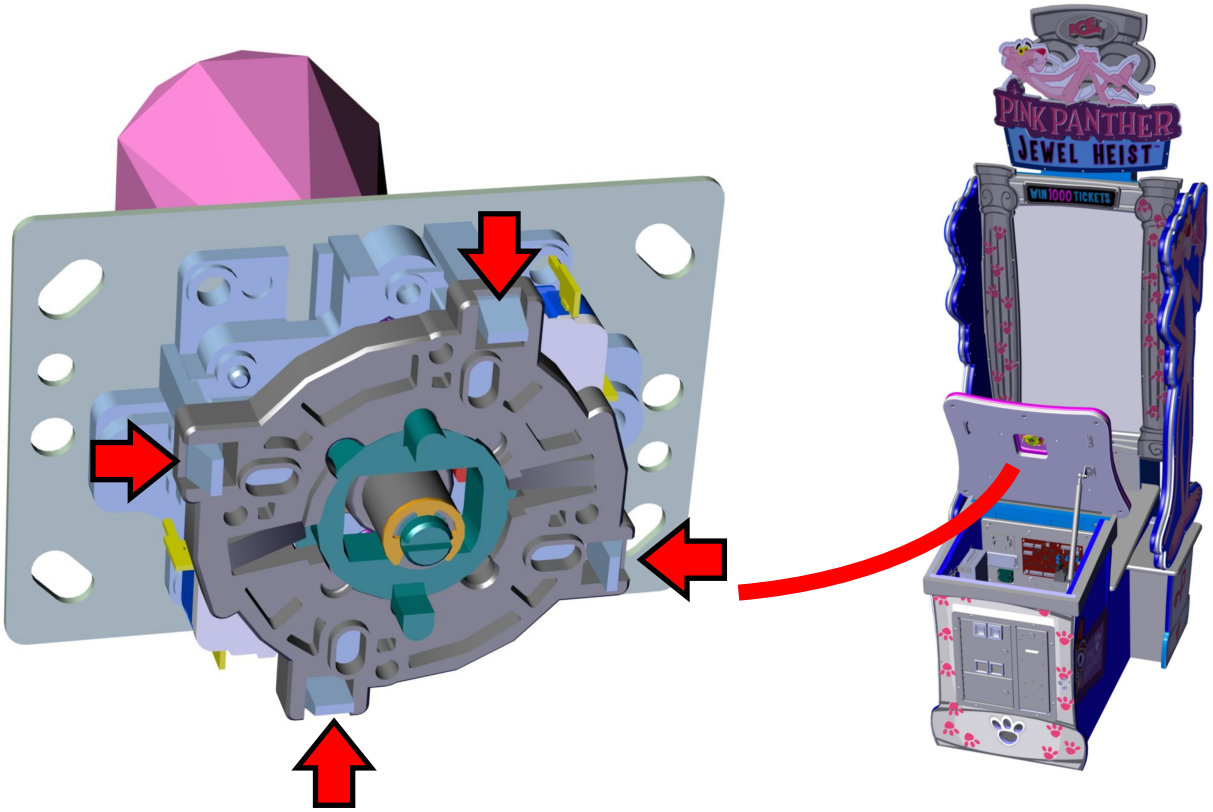

Control Panel Access

Unlatch the control panel through the coin door to open.

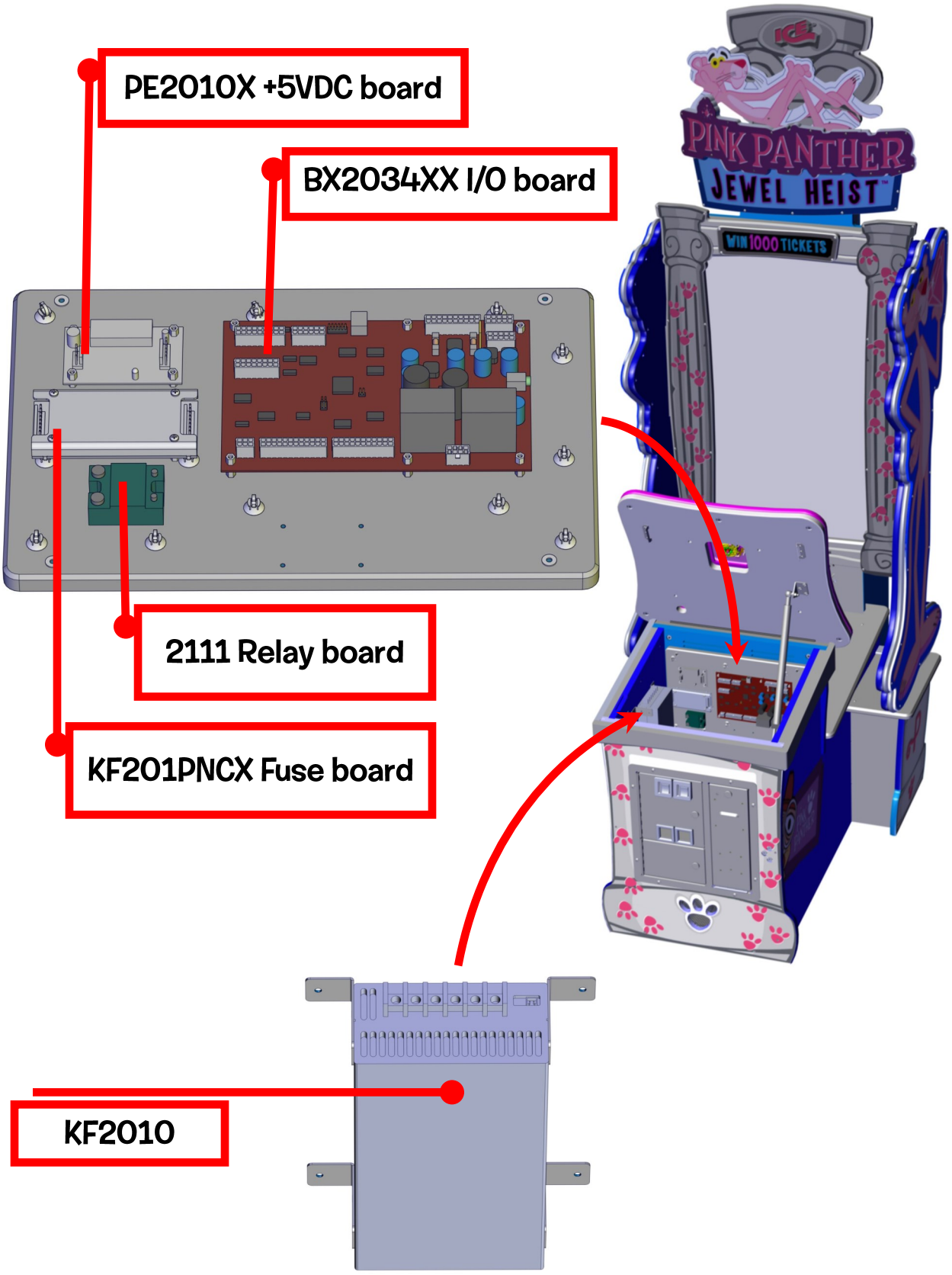

WARRANTY POLICY

ICE INC warrants that all of its products will be free from defects in material and workmanship.

When placing a warranty request, please be prepared to provide the following information:

- Serial Number of Game or Bill of Sale
- Machine Type
- A Detailed Description of the Equipment Fault Symptoms

ICE product, including, Sam's Billiards, Neolith, Game Concepts & Funway is warranted as follows:

- 180 days on the Main PCB, Computers and Motors
- 1 Year on LCD/LED Monitor Panels (through Manufacturer)
- 90 days on all other electronic/mechanical components (i.e. DBV's, Ticket Dispensers)
- 30 days on all parts and repaired items

ICE Inc shall not be obligated to furnish a warranty request under the following conditions:

- Equipment has been subjected to unwarranted stress through abuse or neglect
- Equipment has been damaged as a result of arbitrary repair/modification attempts
- Equipment that has failed through normal wear and tear (bulbs, balls, buttons, etc.)

ICE INC will assume no liability whatsoever for costs associated with labor to replace defective parts or travel time associated therein.

All defective warranty covered components will be replaced with new or factory refurbished components equal to OEM specifications. ICE Inc. (or the manufacturer) will cover domestic (U.S.A.) UPS ground (or comparable shipping means) freight costs to the customer during the warranty period. Expedited shipments are available for an additional charge at the customer's own expense.

Defective parts are to be returned to ICE Inc. (or the manufacturer), at the customer's expense, in a timely fashion. They should be packaged following UPS guidelines to insure safe transit back to ICE. Adequate value freight insurance should be used in case the shipper damages the item and a claim must be filed.

ICE distributors are independent, privately owned and operated. In their judgment, they may sell parts and/or accessories other than those manufactured by ICE Inc. We cannot be responsible for the quality, suitability or safety of any non-ICE part, modification (including labor) that is performed by such a distributor.